NFPA 99 Compliant Duplex Lubricated Rotary Vane Medical Vacuum Package
1.5 HP Horizontal Tank Mount

Vacuum Package
- Fully compliant with the latest edition of NFPA 99
- Two lubricated rotary vane type vacuum pumps with inlet filter and isolation valve for each
- Two motors
- ASME coded horizontal vacuum receiver with bypass and manual drain
- Duplex control panel with automatic lead/lag controls
- System designed for access through a standard 36” doorway
- All components completely pre-piped and pre-wired to single point service connections
- Liquid tight conduit, fittings and junction boxes for all control and power wiring
- All interconnecting piping and wiring is completed and operationally tested prior to shipment

Vacuum Pump
- Lubricated rotary vane pump
- Three non-metallic, non-asbestos vanes with minimum life of 30,000 hrs.
- Direct-driven through a shaft coupling
- Air-cooled
- End (ultimate) vacuum = 29.3" Hg
- Integral, fully recirculating oil supply
- Spin-on oil filter
- High discharge temperature switch
- Oil drain valve assembly with temperature gauge
- Integral oil separation system with three stage oil and smoke eliminators capable of removing 99.9+% of particles from the exhaust gas stream
- Built-in, anti-suck-back valve mounted at the pump inlet
- 2 micron inlet filter for removal of particulates
- Shipped with initial charge of pump fluid

Vacuum Motor
- NEMA rated
- C-face
- TEFC
- 208 or 230/460V 3-phase

Intake Piping
- Vacuum pumps are connected to a common manifold and piped to a horizontal receiver
- Inlet check valve on each pump
- Inlet isolation valve on each pump
- Flexible connectors between pumps and receiver
- Flexible connectors for discharge connections

Vacuum Receiver
- Horizontal orientation with integrally mounted bypass and manual drain
- ASME Code stamped
- National Board Certified
- Rated for a minimum 200 PSIG design pressure
- Vacuum gauge
- Manual drain

Control System
- Mounted and wired duplex control system
- NEMA 12 and UL 508A labeled
- Automatic lead/lag sequencing
- Circuit breaker disconnects for each motor with external operators
- Full voltage motor starters with overload protection
- 120V control circuit transformers for each motor circuit
- Visual and audible reserve unit alarm with isolated contacts for remote alarm
- Hand-off-auto selector switches for reliable back-up
- Automatic alternation of all vacuum pumps based on a first-on/first-off principle with provisions for simultaneous operation
- Automatic activation of reserve unit if required
- Visual and audible alarm indication for high discharge air temperature shutdown with isolated contacts for remote alarm
- SIGNAL 1™ – touch screen gateway

Standard Screen Displays

+ Vacuum level/Runtime
+ Alarm history
+ Service indicator
+ Maintenance schedule
+ Replacement parts
+ Troubleshooting guidelines
+ Historical Trending of system status

+ 7” Wide TFT Graphic Touch Screen with Motion Actuated Backlit LED and Bright 65,536 (16-bit) Colors
+ Downloadable Trend Information via USB Host Port or Network Device
+ 128MB Flash Memory, 64MB DRAM
+ Built-in Ethernet Port 10/100 Base-T (RJ45)
+ Supports over 100 Communication Protocols including BACnet IP, Ethernet IP, and Modbus TCP/IP
+ Built-in Multiple Ports it can handle three (3) additional Protocols simultaneously
+ Built-in VNC server allowing remote monitoring over Ethernet/Internet network for “Real Time” monitoring of live graphics through standard browser, smart phones & mobile devices
+ Share data between HMI and Building Management systems with no additional software to implement

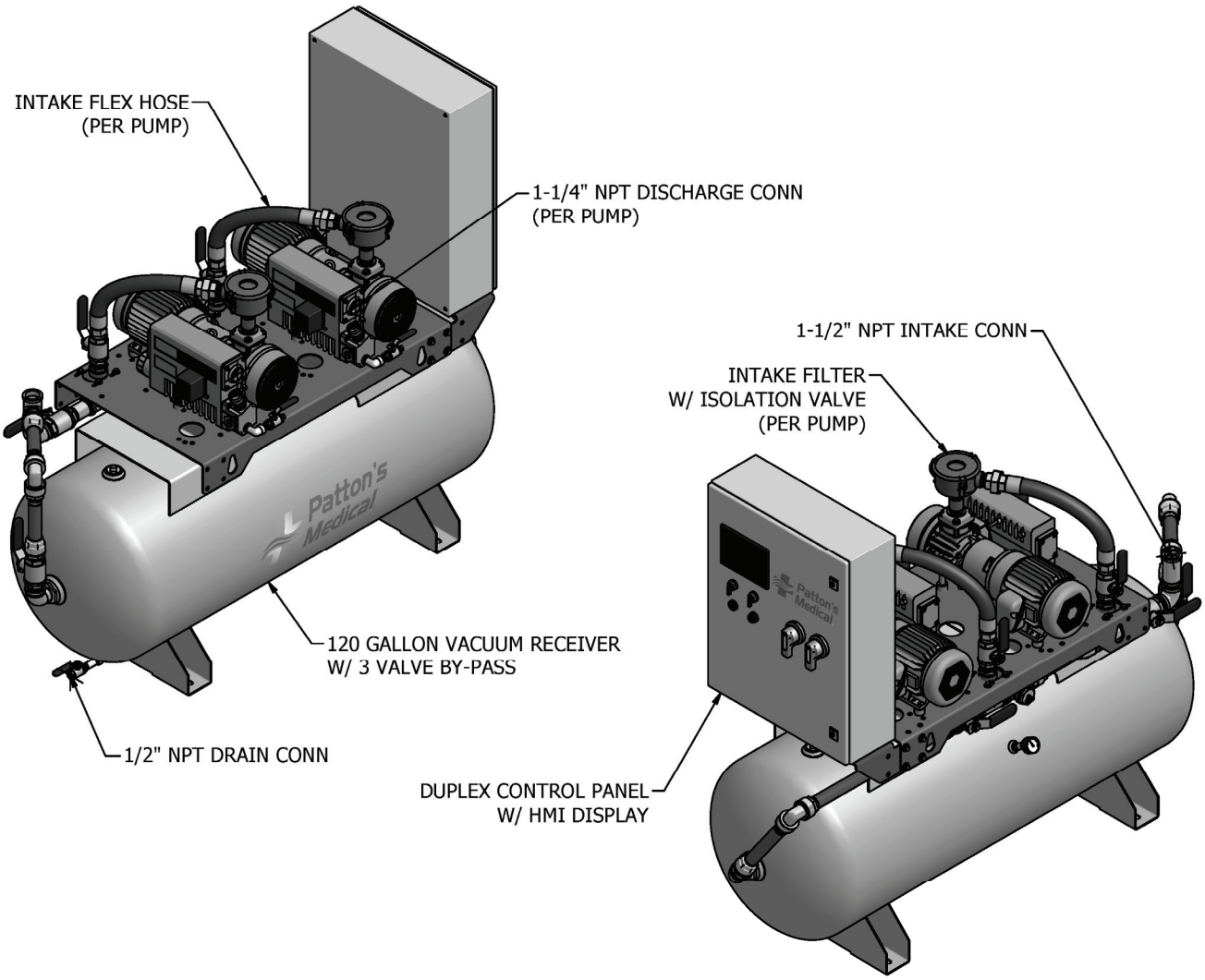

Duplex Lubricated Rotary Vane Medical Vacuum Package Specifications[1]											
Complete Package Model No.	HP	Capacity @19" Hg[2]		Package BTU/HR[3]	Receiver	Noise Level[4]	System FLA			Weight (lbs)	L x W x H (in)
		Pump (SCFM)	System (SCFM)				208V	230V	460V		
72-21-013A	1.5	7.0	7.0	3,828	120 Gal.	70	11			834	L = 76.13 W = 28.48 H = 63.50
72-21-013B								10			
72-21-013C									5		

Notes:
[1] Normal Operating conditions at a maximum ambient of 105° F. Consult factory for higher ambient conditions.
[2] Capacities are shown as NFPA system capacities (reserve vacuum pump on standby).
[3] Package BTU/HR are shown with the reserve pump on standby.
[4] Noise levels are shown in dB(A) and reflect one pump running.

Statement of Warranty

Patton's Medical warrants all Medical Vacuum packages, to be free of defects in material and workmanship under normal use for a period not to exceed thirty (30) months from date of shipment, or twenty-four (24) months from date of start-up.