NFPA 99 Compliant Duplex Oil-Less Claw Medical Vacuum Package
3 HP Horizontal Tank Mount

Vacuum Package
- Fully compliant with the latest edition of NFPA 99
- Two oil-less rotary claw type vacuum pumps with inlet filter and isolation valve for each
- Two motors
- ASME coded horizontal air receiver with bypass and manual drain
- Duplex control panel with automatic lead/lag controls
- All components completely pre-piped and pre-wired to single point service connections
- Vibration isolation mountings
- Liquid tight conduit, fittings and junction boxes for all control and power wiring
- All interconnecting piping and wiring is completed and operationally tested prior to shipment

Vacuum Pump
- Oil-less rotary claw pump
- Direct-driven through a shaft coupling
- Air-cooled
- End (ultimate) vacuum = 28.4" Hg
- Dry-running, with two claw-type, non-contacting rotors
- Sealing fluid not required
- Virtually maintenance-free operation
- Oil change required at approximately 5,000 operating hour intervals in the gearbox only
- Built-in, anti-suck-back valve mounted at the pump inlet and equipped with a inlet filter for removal of particulates

Vacuum Motor
- NEMA rated
- C-face
- TEFC
- 3600 RPM, with 1.15 service factor
- 208 or 230/460V 3-phase

Intake Piping
- Vacuum pumps are connected to a common manifold and piped to a vertical receiver
- Inlet check valve on each pump
- Inlet isolation valve on each pump
- Flexible connector between pump and manifold
- Flexible connectors for inlet and discharge and vibration pads included

Vacuum Receiver
- Horizontal orientation with integrally mounted bypass and manual drain
- ASME Code stamped
- National Board Certified
- Rated for a minimum 200 PSIG design pressure
- Vacuum gauge
- Manual drain

Control System
- Mounted and wired duplex control system
- NEMA 12 and U.L. labeled
- Automatic lead/lag sequencing
- Circuit breaker disconnects for each motor with external operators
- Full voltage motor starters and contactors with overload protection
- 120V control circuit transformers for each motor circuit
- Visual and audible reserve unit alarm with isolated contacts for remote alarm
- Hand-off-auto selector switches
- Automatic alternation of all vacuum pumps based on a first-on/first-off principle with provisions for simultaneous operation if required
- Automatic activation of reserve unit if required
- Visual and audible alarm indication for high discharge temperature shutdown with isolated contacts for remote alarm
- SIGNAL 1™ – touch screen gateway

<u>Standard Screen displays</u>

+ Vacuum level /Runtime
+ Alarm history
+ Service indicator
+ Maintenance schedule
+ Replacement parts
+ Troubleshooting guidelines
+ Historical trending of system status

+ 7” Wide TFT Graphic Touch Screen with Motion Actuated Backlit LED
+ Bright 65,536 (16-bit) Colors
+ Downloadable Trend Information via USB Host Port or Network Device
+ 128MB Flash Memory, 64MB DRAM
+ Built-in Ethernet Port 10/100 Base-T (RJ45)
+ Supports over 100 Communication Protocols including BACnet IP, Ethernet IP, and Modbus TCP/IP
+ With Multiple Ports it can handle three (3) additional Protocols simultaneously
+ Built-in VNC server allowing remote monitoring over Ethernet/Internet network for “Real Time” monitoring of live graphics through standard browser, smart phones and mobile devices.
+ Share data between HMI and Building Management systems with no additional software to implement.

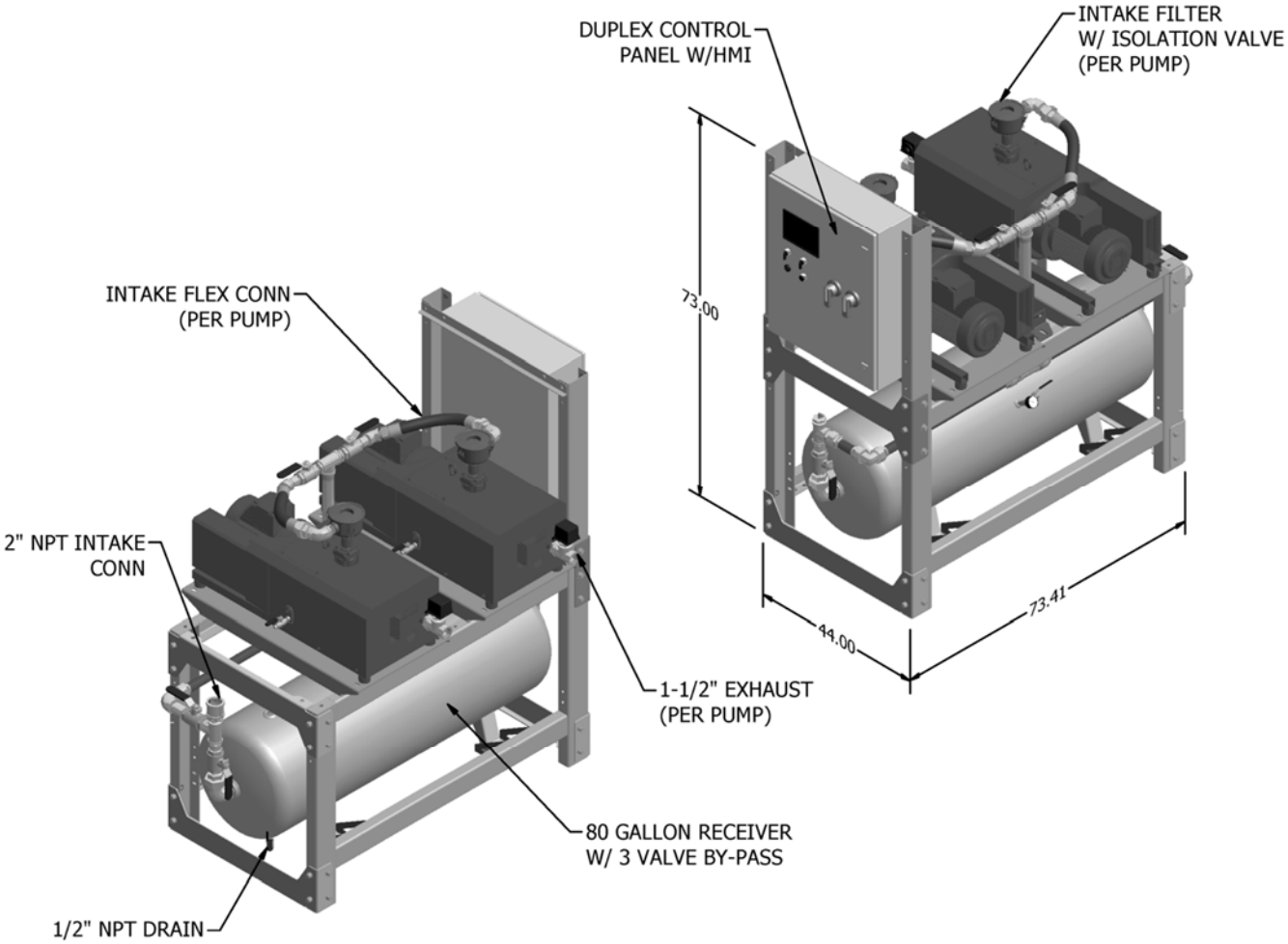

Duplex Claw Medical Vacuum Package Specifications[1]										
System Model No.	HP	Capacity @19" Hg[2]		Package BTU/HR[3]	Receiver Gal.[4]	Noise Level[5]	System FLA			Package Weight
		Pump (SCFM)	System (SCFM)				208V	230V	460V	
74-21-032A	3	21	21	7,650	80	70	19			1493
74-21-032B								18		
74-21-032C									9	

Notes:
[1] Normal Operating conditions at a maximum ambient of 105° F. Consult factory for higher ambient conditions.
[2] Capacities are shown as NFPA system capacities (reserve vacuum pump on standby).
[3] Package BTU/HR are shown with the reserve pump on standby.
[4] Receivers of 80 gallon capacity are standard
[5] Noise levels are shown in dB(A) and reflect one pump running.

Statement of Warranty

Patton's Medical warrants all Medical Vacuum packages, to be free of defects in material and workmanship under normal use for a period not to exceed thirty (30) months from date of shipment, or twenty-four (24) months from date of start-up.